ALLOWABLE CONNECTION TYPES FOR MISCELLANEOUS ATTACHMENTS - SUBSTRUCTURES

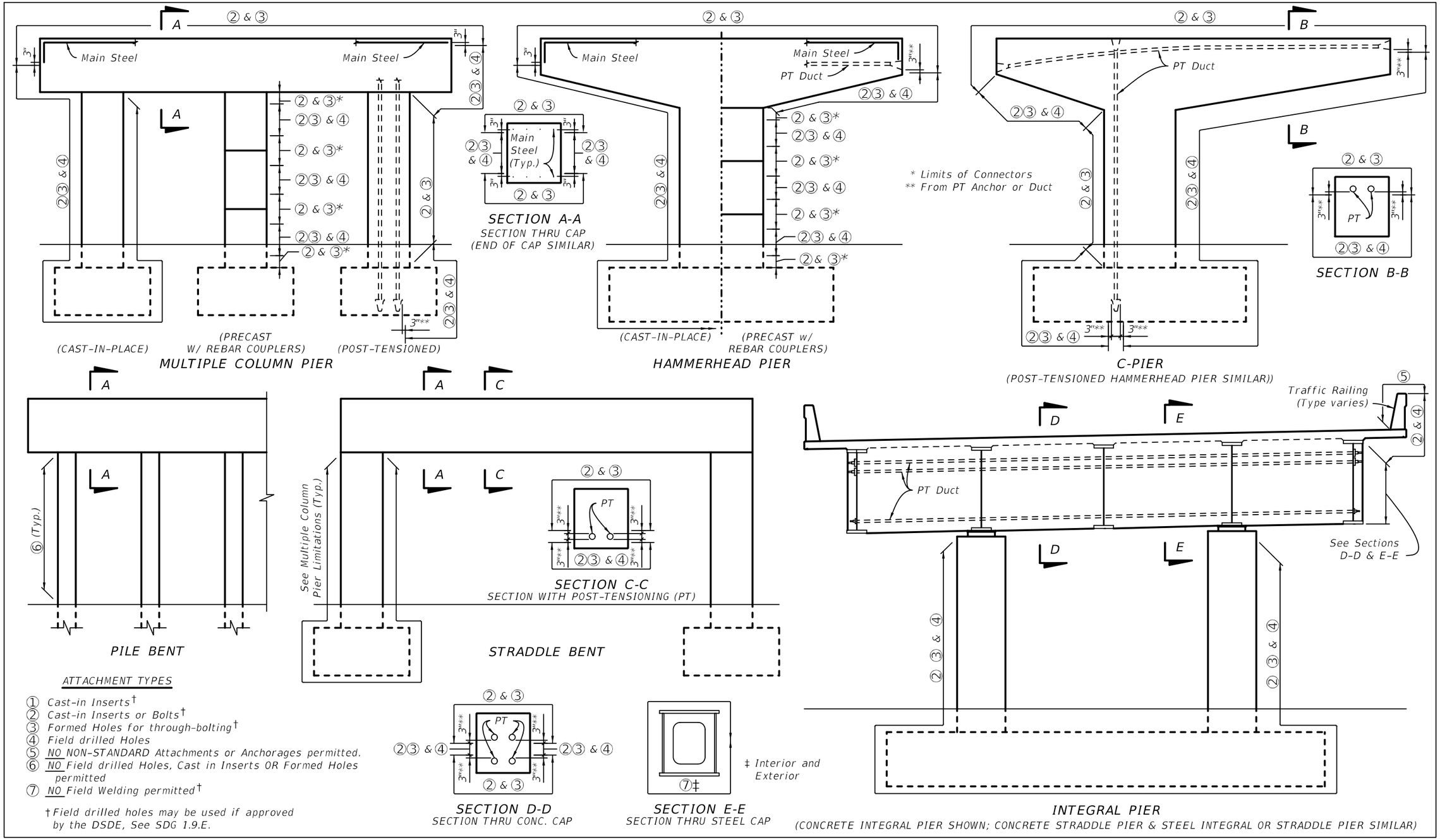
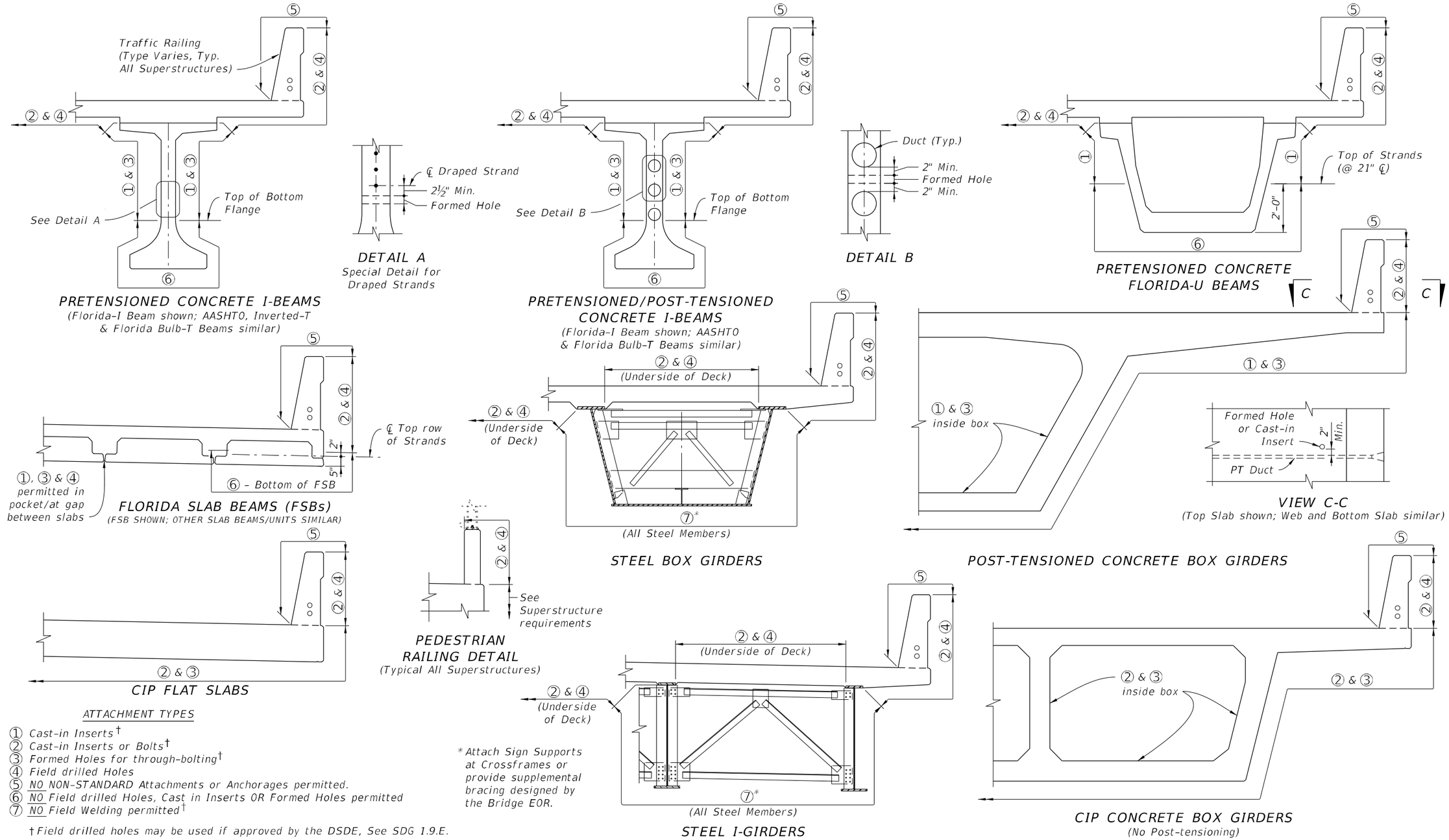
ALLOWABLE CONNECTION TYPES FOR MISCELLANEOUS ATTACHMENTS - SUPERSTRUCTURES